Chapter 10

Equilibrium-Based Methods for Multicomponent Absorption, Stripping, Distillation, and Extraction

§10.0 INSTRUCTIONAL OBJECTIVES

After completing this chapter, you should be able to:

- Write MESH equations for an equilibrium stage in a multicomponent vapor–liquid cascade.
- Explain how equilibrium stages can be combined to form a countercurrent cascade of N equilibrium stages that can be used to model absorption, stripping, distillation, and extraction.
- Discuss different methods to solve the MESH equations and the use of the tridiagonal-matrix algorithm.
- Solve rigorously countercurrent-flow, multi-equilibrium stage, multicomponent separation problems by the bubble-point and sum-rates methods; and, with a process simulator, the Newton–Raphson and inside-out methods. Select the best method to use for a given problem.

Except for simple cases, such as binary distillation, or when physical properties or stage efficiencies are not well known, the design methods described in the previous chapters are suitable only for preliminary-design studies. Final design of multistage, multicomponent separation equipment requires rigorous determination of temperatures, pressures, stream flow rates, stream compositions, and heat-transfer rates at each stage by solving material-balance, energy-balance, and equilibrium relations for each stage. Unfortunately, these relations consist of strongly interacting nonlinear algebraic equations, where solution procedures are difficult and tedious. However, once the procedures are programmed for a high-speed digital computer, solutions are usually achieved rapidly and almost routinely. This chapter discusses the solution methods used in process simulators, with applications to absorption, stripping, distillation, and liquid–liquid extraction. Applications to the more difficult operations of extractive, azeotropic, and reactive distillation are covered in Chapter 11.

This chapter begins in §10.1 with the development of a mathematical model for an equilibrium stage for vapor–liquid contacting. The resulting equations, when collected together for a countercurrent cascade of stages, are called the MESH equations. A number of strategies for solving these equations are summarized in §10.2, with the most important considered in detail. All utilize an algorithm for solving a tridiagonal-matrix equation, described in §10.3. When the feed(s) to the cascade contains components of a narrow boiling-point range, the bubble-point (BP) method is efficient. When the components cover a wide range of volatilities, the sum-rates (SR) method is a better choice. The BP and SR methods are relatively simple, but are restricted to ideal and nearly ideal mixtures, and are limited in allowable specifications. §10.4 and 10.5 present more flexible, complex methods, Newton–Raphson (NR) and inside-out, respectively, which are required for nonideal systems and are widely available in process simulators.

§10.1 THEORETICAL MODEL FOR AN EQUILIBRIUM STAGE

For any stage in a countercurrent cascade, assume (1) phase equilibrium is achieved at each stage, (2) no chemical reactions occur, and (3) entrainment of liquid drops in vapor and occlusion of vapor bubbles in liquid are negligible. Figure 10.1 represents such a stage for the vapor–liquid case, where the stages are numbered down from the top. The same representation applies to liquid–liquid extraction if the higher-density liquid phases are represented by liquid streams and the lower-density liquid phases are represented by vapor streams.

Entering stage j is a single- or two-phase feed of molar flow rate F_j, with overall composition in mole fractions $z_{i,j}$ of component i, temperature T_{F_j}, pressure P_{F_j}, and corresponding overall molar enthalpy h_{F_j}. Feed pressure is equal to or greater than stage pressure P_j. If greater, $\left(P_F - P_j\right)$ is reduced to zero adiabatically across valve F.

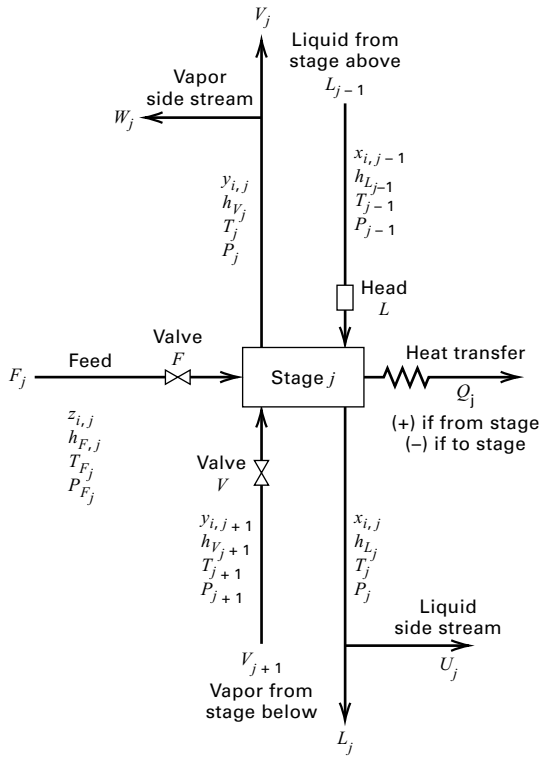

Figure 10.1 General equilibrium stage.

Also entering stage j is interstage liquid from stage $j-1$ above, if any, of molar flow rate L_{j-1}, with composition in mole fractions $x_{i,j-1}$, enthalpy $h_{L_{j-1}}$, temperature T_{j-1}, and pressure P_{j-1}, which is equal to or less than the pressure of stage j. Pressure of liquid from stage $j-1$ is increased adiabatically by hydrostatic head change across head L.

Similarly, from stage $j+1$ below, interstage vapor of molar flow rate V_{j+1}, with composition in mole fractions $y_{i,j+1}$, enthalpy $h_{V_{j+1}}$, temperature T_{j+1}, and pressure P_{j+1} enters stage j. Any excess pressure $\left(P_{j+1}-P_j\right)$ is reduced to zero adiabatically across valve V.

Leaving stage j is vapor of intensive properties $y_{i,j}$, h_{V_j}, T_j, and P_j. This stream can be divided into a vapor sidestream of molar flow rate W_j and an interstage stream of molar flow rate V_j to be sent to stage $j-1$ or, if $j=1$, to leave as a product. Also leaving stage j is liquid of intensive properties $x_{i,j}$, h_{L_j}, T_j, and P_j, in equilibrium with vapor $\left(V_j+W_j\right)$. This liquid is divided into a sidestream of molar flow rate U_j and an interstage stream of molar flow rate L_j to be sent to stage $j+1$ or, if $j=N$, to leave as a product.

Heat can be transferred at a rate Q_j from (+) or to (−) stage j to simulate stage intercoolers, interheaters, intercondensers, interreboilers, condensers, or reboilers, as shown in Figure 1.8. The model in Figure 10.1 does not allow for pumparounds of the type shown in Figure 10.2. They are often used in columns having sidestreams, such as crude units in petroleum refineries, in order to conserve energy and balance column vapor loads. Advanced models in process simulators can handle pumparounds.

Associated with each general stage are the following indexed equations expressed in terms of the variable set in Figure 10.1. However, variables other than those shown in

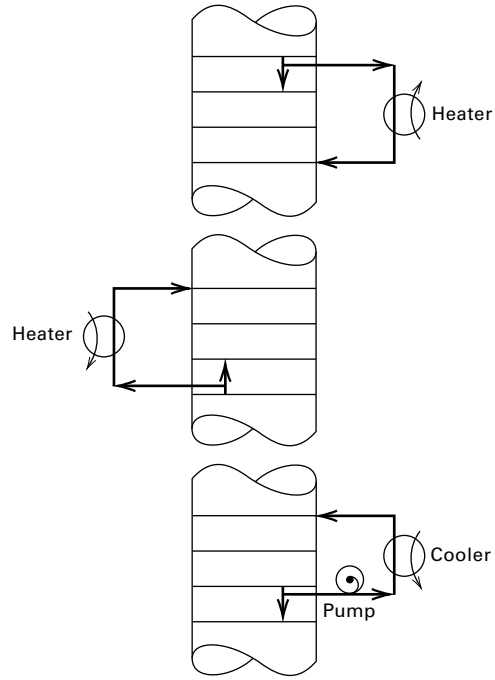

Figure 10.2 Pumparounds.

Figure 10.1 can be used, e.g. component flow rates can replace mole fractions, and sidestream flow rates can be expressed as fractions of interstage flow rates.

The equations are similar to those of §5.7[1] and are referred to as MESH equations, after Wang and Henke [1].

1. M equations—*M*aterial balance for each component (C equations for each stage).

$$\boxed{\begin{aligned} M_{i,j} &= L_{j-1}x_{i,j-1} + V_{j+1}y_{i,j+1} + F_j z_{i,j} \\ &\quad - \left(L_j + U_j\right)x_{i,j} - \left(V_j + W_j\right)y_{i,j} = 0 \end{aligned}} \tag{10-1}$$

2. E equations—phase-*E*quilibrium relation for each component (C equations for each stage), from (2-19).

$$\boxed{E_{i,j} = y_{i,j} - K_{i,j}x_{i,j} = 0} \tag{10-2}$$

where $K_{i,j}$ is the phase-equilibrium ratio or K-value.

3. S equations—mole-fraction *S*ummations (one for each stage),

$$\boxed{\left(S_y\right)_j = \sum_{i=1}^{C} y_{i,j} - 1.0 = 0} \tag{10-3}$$

$$\boxed{\left(S_x\right)_j = \sum_{i=1}^{C} x_{i,j} - 1.0 = 0} \tag{10-4}$$

[1]Unlike the treatment in §5.7, all C component material balances are included here, and the total material balance is omitted. Also, the separate but equal temperature and pressure of the equilibrium phases are replaced by the stage temperature and pressure.

4. H equation—energy balance (one for each stage).

$$\boxed{\begin{aligned} H_j = {} & L_{j-1}h_{L_{j-1}} + V_{j+1}h_{V_{j+1}} + F_j h_{F_j} \\ & - (L_j + U_j)h_{L_j} - (V_j + W_j)h_{V_j} - Q_j = 0 \end{aligned}} \tag{10-5}$$

where kinetic- and potential-energy changes are ignored.

A total material-balance equation can be used in place of (10-3) or (10-4). It is derived by combining these two equations and $\sum_j z_{i,j} = 1.0$ with (10-1) summed over the C components and over stages 1 through j to give

$$\boxed{L_j = V_{j+1} + \sum_{m=1}^{j}(F_m - U_m - W_m) - V_1} \tag{10-6}$$

In general, $K_{i,j} = K_{i,j}\{T_j, P_j, \mathbf{x}_j, \mathbf{y}_j\}, h_{V_j} = h_{V_j}\{T_j, P_j, \mathbf{y}_j\}$, and $h_{L_j} = h_{L_j}\{T_j, P_j, \mathbf{x}_j\}$, where $\mathbf{x}_j$ and $\mathbf{y}_j$ (in bold) are vectors of component mole fractions in streams leaving stage j. If these property relations are not counted as equations and the three properties are not counted as variables, each equilibrium stage is defined only by the $2C + 3$ MESH equations. A countercurrent cascade of N such stages, as shown in Figure 10.3, is represented by $N(2C + 3)$ such equations in $[N(3C + 10) + 1]$ variables. If N and all F_j, $z_{i,j}$, T_{F_j}, P_{F_j}, P_j, U_j, W_j, and Q_j are specified, the model is represented by $N(2C + 3)$ simultaneous algebraic equations in $N(2C + 3)$ unknown (output) variables comprising all $x_{i,j}$, $y_{i,j}$, L_j, V_j, and T_j, where the M, E, and H equations are nonlinear. If other variables are specified, corresponding substitutions are made to the list of output variables. Regardless, the result is a set containing nonlinear equations that must be solved by an iterative technique.

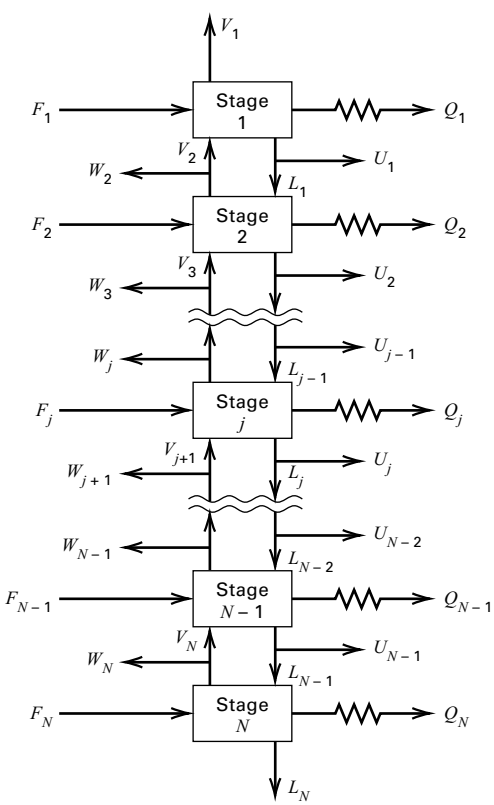

Figure 10.3 General countercurrent cascade of N stages.

§10.2 STRATEGY OF MATHEMATICAL SOLUTION

A wide variety of iterative solution procedures for solving nonlinear, algebraic equations has appeared in the literature. In general, these procedures make use of equation partitioning in conjunction with equation tearing and/or linearization by Newton–Raphson techniques, which are described in detail by Myers and Seider [2]. Equation tearing was applied in §4.4 for a flash computation.

Early, pre-computer attempts to solve (10-1) to (10-5) or equivalent forms of these equations resulted in the classical *stage-by-stage*, *equation-by-equation* calculational procedures of Lewis–Matheson [3] in 1932 and Thiele–Geddes [4] in 1933 based on equation tearing for solving simple fractionators with one feed and two products. Composition-independent K-values and component enthalpies were generally employed. The Thiele–Geddes method was formulated to handle the Case II variable specification in Table 5.4 wherein the number of equilibrium stages above and below the feed, the reflux ratio, and the distillate flow rate are specified, and stage temperatures and interstage vapor (or liquid) flow rates are the iteration (tear) variables. Although widely used for hand calculations in the years following its development, the Thiele–Geddes method was often found to be numerically unstable when attempts were made to program it for a computer. However, Holland [5] developed a Thiele–Geddes procedure called the *theta method*, which was applied with considerable success.

The Lewis–Matheson method was formulated for the Case I variable specification in Table 5.4 to determine stage requirements for specifications of the separation of two key components, a reflux ratio and a feed-stage location criterion. Both outer and inner iterations are required. The outer-loop tear variables are the mole fractions or flow rates of nonkey components in the products. The inner-loop tear variables are the interstage vapor (or liquid) flows. The Lewis–Matheson method was widely used for hand calculations, but was often unstable when implemented on a computer.

Rather than an equation-by-equation solution procedure, Amundson and Pontinen [6], in a significant development in 1958, showed that (10-1), (10-2), and (10-6) of the MESH equations for a Case II specification could be combined and solved component-by-component from simultaneous-linear-equation sets for all N stages by an equation-tearing procedure using the same tear variables as the Thiele–Geddes method. Although tedious for hand calculations, the equation sets are easily solved by a digital computer.

In a study in 1964, Friday and Smith [7] systematically analyzed a number of tearing techniques for solving the MESH equations. They considered the choice of output variable for each equation and showed that no one tearing technique could solve all problem types. For separators where the

feed(s) contain(s) only components of similar volatility (narrow-boiling case), a modified Amundson–Pontinen approach, termed the *bubble-point (BP) method*, was recommended. For a feed(s) containing components of widely different volatility (wide-boiling case), the BP method was subject to failure and a so-called sum-rates (SR) method was suggested. For intermediate cases, the equation-tearing technique may fail to converge; in that case, Friday and Smith indicated that either a Newton–Raphson method or a combined tearing and Newton–Raphson technique was necessary.

Boston and Sullivan [8] in 1974 presented an alternative, robust approach to obtaining a solution to the MESH equations. They defined energy and volatility parameters, which are used as the primary successive-approximation variables. A third parameter, which is a combination of the phase flow rates and temperature at each stage, was employed to iterate on the primary variables—thus the name *inside-out method*. Current practice is based mainly on the BP, SR, Newton–Raphson, and inside-out methods, all of which are treated in this chapter. The latter two methods are most widely used in process simulators because they provide flexibility in the choice of specified variables and are capable of solving most problems. However, the first iteration of the BP or SR method is frequently used to provide estimated values to initiate the Newton–Raphson (NR) or inside-out method.

§10.3 EQUATION-TEARING PROCEDURES

The modern equation-tearing procedures are readily programmed, rapid, and require a minimum of computer memory. Although they can be applied to a wider variety of problems than the Thiele–Geddes tearing procedure, they are usually limited to the same choice of specified variables, including most importantly the number of equilibrium stages and feed and product stage locations. Product purities, species recoveries, interstage flow rates, and stage temperatures are not specified.

§10.3.1 Tridiagonal Matrix Algorithm

The key to the BP and SR tearing procedures is the tridiagonal matrix, which results from a modified form of the M equations, (10-1), when they are torn from the other equations by selecting T_j and V_j as the tear variables, leaving the modified M equations linear in the unknown liquid mole fractions. This set of equations, one for each component, is solved by a modified Gaussian–elimination algorithm due to Thomas as applied by Wang and Henke [1]. The modified M equations are obtained by substituting (10-2) into (10-1) to eliminate $\boldsymbol{y}$ and by substituting (10-6) into (10-1) to eliminate $\boldsymbol{L}$. Thus, equations for calculating $\boldsymbol{y}$ and $\boldsymbol{L}$ are partitioned from the other equations. The result for each component, i, and each stage, j, is as follows, where the i subscripts have been dropped from the B, C, and D terms.

$$A_j x_{i,j-1} + B_j x_{i,j} + C_j x_{i,j+1} = D_j \tag{10-7}$$

where

$$A_j = V_j + \sum_{m=1}^{j-1} (F_m - W_m - U_m) - V_1, \quad 2 \le j \le N \tag{10-8}$$

$$B_j = -\left[V_{j+1} + \sum_{m=1}^{j} (F_m - W_m - U_m) - V_1 + U_j + \left(V_j + W_j\right)K_{i,j}\right], \quad 1 \le j \le N \tag{10-9}$$

$$C_j = V_{j+1} K_{i,j+1}, \quad 1 \le j \le N-1 \tag{10-10}$$

$$D_j = -F_j z_{i,j}, \quad 1 \le j \le N \tag{10-11}$$

with $x_{i,0} = 0$, $V_{N+1} = 0$, $W_1 = 0$, and $U_N = 0$, as indicated in Figure 10.3. If the modified M equations are grouped by component, they can be partitioned by writing them as a series of separate tridiagonal-matrix equations, one for each component, where the output variable for each matrix equation is $\boldsymbol{x}_i$ over the entire N-stage cascade.

$$\begin{bmatrix} B_1 & C_1 & 0 & 0 & 0 & \cdots & & & & \cdots & 0 \\ A_2 & B_2 & C_2 & 0 & 0 & \cdots & & & & \cdots & 0 \\ 0 & A_3 & B_3 & C_3 & 0 & \cdots & & & & \cdots & 0 \\ \cdots & \cdots & & & & & & & & & \cdots \\ \cdots & & & & & & & & & & \cdots \\ \cdots & & & & & & & & & & \cdots \\ \cdots & & & & & & & & & & \cdots \\ \cdots & & & & & & & & & & \cdots \\ \cdots & & & & & & & & & & \cdots \\ 0 & \cdots & & & & \cdots & 0 & A_{N-2} & B_{N-2} & C_{N-2} & 0 \\ 0 & \cdots & & & & \cdots & 0 & 0 & A_{N-1} & B_{N-1} & C_{N-1} \\ 0 & \cdots & & & & \cdots & 0 & 0 & 0 & A_N & B_N \end{bmatrix} \times \begin{bmatrix} x_{i,1} \\ x_{i,2} \\ x_{i,3} \\ \cdots \\ \cdots \\ \cdots \\ \cdots \\ \cdots \\ \cdots \\ x_{i,N-2} \\ x_{i,N-1} \\ x_{i,N} \end{bmatrix} = \begin{bmatrix} D_1 \\ D_2 \\ D_3 \\ \cdots \\ \cdots \\ \cdots \\ \cdots \\ \cdots \\ \cdots \\ D_{N-2} \\ D_{N-1} \\ D_N \end{bmatrix} \tag{10-12}$$

Constants B_j and C_j for each component depend only on tear variables $\boldsymbol{T}$ and $\boldsymbol{V}$ if K-values are composition-independent. If not, previous iteration compositions may be used to estimate K-values.

The Thomas algorithm for solving the linearized equation set (10-12) is a Gaussian–elimination procedure involving forward elimination starting from stage 1 and working toward stage N to finally isolate $x_{i,N}$. Other values of $x_{i,j}$ are then obtained, starting with $x_{i,N-1}$ by backward substitution. For five stages, the matrix equations for a given component at the beginning, middle, and end of the procedure are as shown in Figure 10.4.

The details of the procedure are as follows. In the Thomas algorithm, for stage 1, (10-7) is $B_1 x_{i,1} + C_1 x_{i,2} = D_1$, which can be solved for $x_{i,1}$ in terms of unknown $x_{i,2}$ to give

$$x_{i,1} = (D_1 - C_1 x_{i,2})/B_1$$

Let $\quad p_1 = \dfrac{C_1}{B_1} \quad$ and $\quad q_1 = \dfrac{D_1}{B_1}$

$$\begin{bmatrix} B_1 & C_1 & 0 & 0 & 0 \\ A_2 & B_2 & C_2 & 0 & 0 \\ 0 & A_3 & B_3 & C_3 & 0 \\ 0 & 0 & A_4 & B_4 & C_4 \\ 0 & 0 & 0 & A_5 & B_5 \end{bmatrix} \cdot \begin{bmatrix} x_1 \\ x_2 \\ x_3 \\ x_4 \\ x_5 \end{bmatrix} = \begin{bmatrix} D_1 \\ D_2 \\ D_3 \\ D_4 \\ D_5 \end{bmatrix}$$

(a)

$$\begin{bmatrix} 1 & p_1 & 0 & 0 & 0 \\ 0 & 1 & p_2 & 0 & 0 \\ 0 & 0 & 1 & p_3 & 0 \\ 0 & 0 & 0 & 1 & p_4 \\ 0 & 0 & 0 & 0 & 1 \end{bmatrix} \cdot \begin{bmatrix} x_1 \\ x_2 \\ x_3 \\ x_4 \\ x_5 \end{bmatrix} = \begin{bmatrix} q_1 \\ q_2 \\ q_3 \\ q_4 \\ q_5 \end{bmatrix}$$

(b)

$$\begin{bmatrix} 1 & 0 & 0 & 0 & 0 \\ 0 & 1 & 0 & 0 & 0 \\ 0 & 0 & 1 & 0 & 0 \\ 0 & 0 & 0 & 1 & 0 \\ 0 & 0 & 0 & 0 & 1 \end{bmatrix} \cdot \begin{bmatrix} x_1 \\ x_2 \\ x_3 \\ x_4 \\ x_5 \end{bmatrix} = \begin{bmatrix} r_1 \\ r_2 \\ r_3 \\ r_4 \\ r_5 \end{bmatrix}$$

(c)

Figure 10.4 The coefficient matrix for the M equations of a component at various steps in the Thomas algorithm for five stages. The i subscript is deleted from x. (a) Initial matrix. (b) Matrix after forward elimination. (c) Matrix after backward substitution.

Then
$$x_{i,1} = q_1 - p_1 x_{i,2} \tag{10-13}$$

Thus, the coefficients in the matrix become $B_1 \leftarrow 1$, $C_1 \leftarrow p_1$, and $D_1 \leftarrow q_1$, where $\leftarrow$ means "is replaced by." Only values for p_1 and q_1 need be stored in memory.

For stage 2, (10-7) can be combined with (10-13) and solved for $x_{i,2}$ to give

$$x_{i,2} = \frac{D_2 - A_2 q_1}{B_2 - A_2 p_1} - \left(\frac{C_2}{B_2 - A_2 p_1}\right) x_{i,3}$$

Let
$$q_2 = \frac{D_2 - A_2 q_1}{B_2 - A_2 p_1} \quad \text{and} \quad p_2 = \frac{C_2}{B_2 - A_2 p_1}$$

Then
$$x_{i,2} = q_2 - p_2 x_{i,3}$$

Thus, $A_2 \leftarrow 0$, $B_2 \leftarrow 1$, $C_2 \leftarrow p_2$, and $D_2 \leftarrow q_2$. Only values for p_2 and q_2 need be stored in memory.

In general,

$$p_j = \frac{C_j}{B_j - A_j p_{j-1}} \tag{10-14}$$

$$q_j = \frac{D_j - A_j q_{j-1}}{B_j - A_j p_{j-1}} \tag{10-15}$$

Then
$$x_{i,j} = q_j - p_j x_{i,j+1} \tag{10-16}$$

with $A_j \leftarrow 0$, $B_j \leftarrow 1$, $C_j \leftarrow p_j$, and $D_j \leftarrow q_j$. Only p_j and q_j need be stored. Thus, starting with stage 1, values of p_j and q_j are computed recursively in the order $p_1, q_1, p_2, q_2, \ldots, p_{N-1}, q_{N-1}, q_N$. For stage N, (10-16) isolates $x_{i,N}$ as

$$x_{i,N} = q_N \tag{10-17}$$

Successive values of x_i are computed recursively by backward substitution from (10-16) in the form

$$x_{i,j-1} = q_{j-1} - p_{j-1} x_{i,j} = r_{j-1} \tag{10-18}$$

Equation (10-18) corresponds to the identity matrix.

The Thomas algorithm avoids buildup of computer truncation errors because none of the steps involves subtraction of nearly equal quantities. Furthermore, computed values of $x_{i,j}$ are almost always positive. The algorithm is superior to alternative matrix-inversion routines. A modified Thomas algorithm for difficult cases is given by Boston and Sullivan [9]. Such cases can occur for columns with large numbers of equilibrium stages and components whose absorption factors, $A = L/KV$, are less than unity in one section and greater than unity in another.

§10.3.2 Bubble-Point (BP) Method for Distillation

Frequently, distillation involves species that cover a relatively narrow range of K-values. A particularly effective procedure for this case was suggested by Friday and Smith [7] and developed in detail by Wang and Henke [1]. It is referred to as the bubble-point (BP) method because a new set of stage temperatures is computed during each iteration from the bubble-point equations in §4.4.2. All equations are partitioned and solved sequentially except for the M equations (10-1), which are solved separately for each component by the tridiagonal-matrix technique.

The Wang–Henke algorithm is shown in Figure 10.5. A FORTRAN program is available [10]. Specifications are conditions and stage location of feeds, stage pressures, flow rates of sidestreams (note that liquid distillate flow rate, if any, is designated as U_1), heat-transfer rates for all stages except stage 1 (condenser) and stage N (reboiler), total stages, bubble-point reflux flow rate, and vapor distillate flow rate. Figure 10.6 shows a sample specification for a complex column with two feeds, two sidestreams, a mixed condenser, and an intercooler.

To initiate the calculations, values of tear variables, V_j and T_j, are assumed. Generally, it is sufficient to establish an initial set of V_j values based on constant-molar interstage flows using the specified reflux, distillate, feed, and sidestream flows. Initial T_j values can be provided by computing the bubble-point temperature of an estimated bottoms product and the dew-point temperature of an assumed distillate product (or computing a bubble-point temperature if distillate is liquid, or a temperature in between the dew point and bubble point if distillate is both vapor and liquid), and then using linear interpolation for the other stage temperatures.

To solve (10-12) for $\boldsymbol{x}_i$ by the Thomas method, $K_{i,j}$ values are required. When they are composition-dependent, initial assumptions for all $x_{i,j}$ and $y_{i,j}$ values are also needed, unless ideal K-values are employed initially. For each iteration, the computed set of $x_{i,j}$ values for each stage are not likely to satisfy the summation constraint given by (10-4). Although not mentioned by Wang and Henke, it is advisable to normalize the set of computed $x_{i,j}$ values by the relation

$$\left(x_{i,j}\right)_{\text{normalized}} = \frac{x_{i,j}}{\sum_{i=1}^{C} x_{i,j}} \tag{10-19}$$

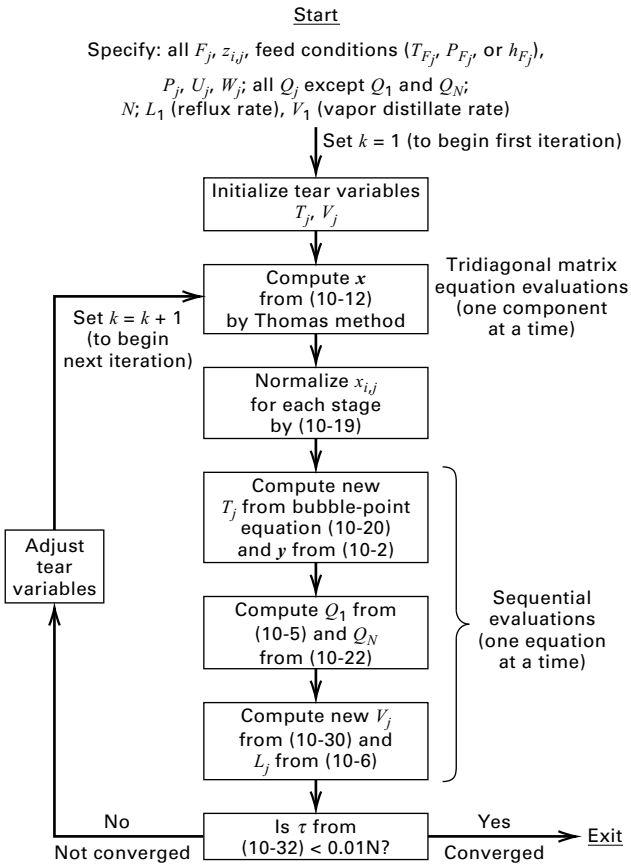

Figure 10.5 Algorithm for Wang–Henke BP method.

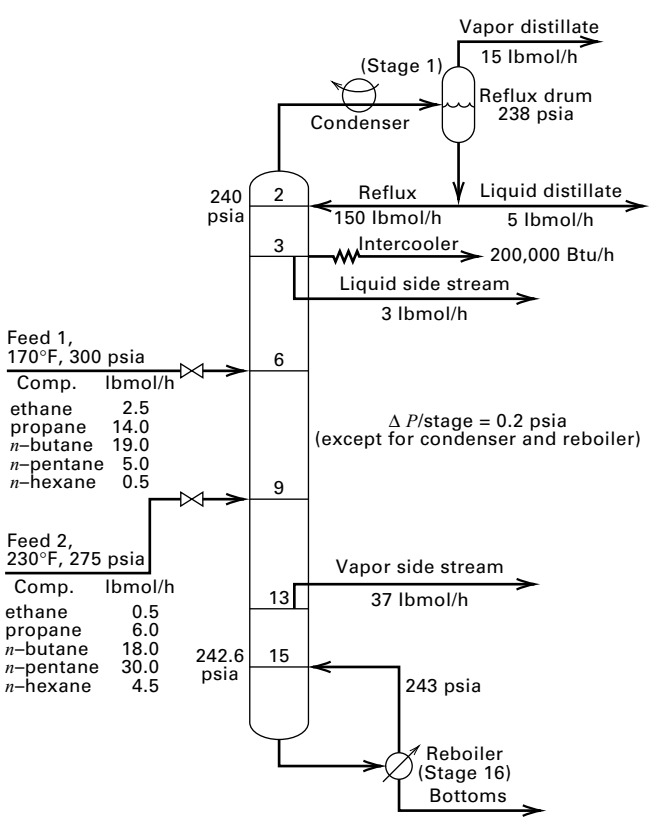

Figure 10.6 Sample specification for application of Wang–Henke BP method to distillation.

New temperatures for the stages are obtained by bubble-point calculations using normalized $x_{i,j}$ values. Friday and Smith [7] showed that bubble-point calculations are effective for mixtures having a narrow range of K-values because temperatures are not sensitive to composition. In the limiting case where all components have identical K-values, the temperature corresponds to $K_{i,j} = 1$ and is not dependent on $x_{i,j}$. At the other extreme, bubble-point calculations can be sensitive to composition for a binary mixture containing one component with a high K-value that changes little with temperature and a second component with a low K-value that changes rapidly with temperature. Such a mixture is methane and n-butane at 400 psia. The effect on bubble-point temperature of small quantities of methane dissolved in liquid n-butane is very large:

Liquid Mole Fraction of Methane	Bubble-Point Temperature, °F
0.000	275
0.018	250
0.054	200
0.093	150

Thus, the BP method is best when components have a relatively narrow range of K-values.

The necessary bubble-point equation is obtained in the manner described in §4.4.2 by combining (10-2) and (10-3) to eliminate $y_{i,j}$, giving

$$\sum_{i=1}^{C} K_{i,j} x_{i,j} - 1.0 = 0 \tag{10-20}$$

which is nonlinear in T_j and must be solved iteratively. Wang and Henke prefer to use Muller's iterative method [11] because it is reliable and does not require derivatives. Muller's method requires three initial assumptions of T_j. For each assumption, the value of S_j is computed from

$$S_j = \sum_{i=1}^{C} K_{i,j} x_{i,j} - 1.0 = 0 \tag{10-21}$$

The three sets of (T_j, S_j) are fitted to a quadratic equation for S_j in terms of T_j, which is then employed to predict T_j for $S_j = 0$, as required by (10-20). The validity of this value of T_j is checked by using it to compute S_j in (10-21). The quadratic fit and S_j check are repeated with the three best sets of (T_j, S_j) until some convergence tolerance is satisfied, say, $\left|T_j^{(n)} - T_j^{(n-1)}\right| / T_j^{(n)} \leq 0.0001$, with T in °R or K, where n is the iteration number for the temperature loop in the bubble-point calculation; or $S_j \leq 0.0001\ C$ can be used, which is preferred.

Values of $y_{i,j}$ are determined along with the calculation of stage temperatures using the E equations, (10-2). With a consistent set of values for $x_{i,j}$, T_j, and $y_{i,j}$, molar enthalpies are computed for each liquid and vapor stream leaving a stage. Since F_1, V_1, U_1, W_1, and L_1 are specified, V_2 is readily obtained from (10-6), and the condenser duty, a (+) quantity, is obtained from (10-5). Reboiler duty, a (−) quantity, is

determined by summing (10-5) for all stages to give

$$Q_N = \sum_{j=1}^{N} \left(F_j h_{F_j} - U_j h_{L_j} - W_j h_{V_j}\right) - \sum_{j=1}^{N-1} \left(Q_j - V_1 h_{V_1} - L_N h_{L_N}\right) \tag{10-22}$$

A new set of V_j tear variables is computed by applying a modified energy balance obtained by combining (10-5) and (10-6) twice to eliminate L_{j-1} and L_j. After rearrangement,

$$\alpha_j V_j + \beta_j V_{j+1} = \gamma_j \tag{10-23}$$

where

$$\alpha_j = h_{L_{j-1}} - h_{V_j} \tag{10-24}$$

$$\beta_j = h_{V_{j+1}} - h_{L_j} \tag{10-25}$$

$$\gamma_j = \left[\sum_{m=1}^{j-1} (F_m - W_m - U_m) - V_1\right]\left(h_{L_j} - h_{L_{j=1}}\right) + F_j\left(h_{L_j} - h_{F_j}\right) + W_j\left(h_{V_j} - h_{L_j}\right) + Q_j \tag{10-26}$$

and enthalpies are evaluated at the stage temperatures last computed rather than at those used to initiate the iteration. Written in didiagonal-matrix form, (10-23) applied over stages 2 to $N-1$ is:

$$\begin{bmatrix} \beta_2 & 0 & 0 & 0 & \cdots & & & 0 \\ \alpha_3 & \beta_3 & 0 & 0 & \cdots & & & 0 \\ 0 & \alpha_4 & \beta_4 & 0 & \cdots & & & 0 \\ \cdots & \cdots & & & & & & \cdots \\ \cdots & & & & & & \cdots & \cdots \\ 0 & \cdots & 0 & \alpha_{N-3} & \beta_{N-3} & 0 & & 0 \\ 0 & \cdots & 0 & 0 & \alpha_{N-2} & \beta_{N-2} & & 0 \\ 0 & \cdots & 0 & 0 & 0 & \alpha_{N-1} & & \beta_{N-1} \end{bmatrix} \cdot \begin{bmatrix} V_3 \\ V_4 \\ V_5 \\ \cdots \\ \cdots \\ V_{N-2} \\ V_{N-1} \\ V_N \end{bmatrix} = \begin{bmatrix} \gamma_2 - \alpha_2 V_2 \\ \gamma_3 \\ \gamma_4 \\ \cdots \\ \cdots \\ \gamma_{N-3} \\ \gamma_{N-2} \\ \gamma_{N-1} \end{bmatrix} \tag{10-27}$$

Matrix equation (10-27) is solved one equation at a time by starting at the top, where V_2 is known, and working down recursively. Thus,

$$V_3 = \frac{\gamma_2 - \alpha_2 V_2}{\beta_2} \tag{10-28}$$

$$V_4 = \frac{\gamma_3 - \alpha_3 V_3}{\beta_3} \tag{10-29}$$

or, in general

$$V_j = \frac{\gamma_{j-1} - \alpha_{j-1} V_{j-1}}{\beta_{j-1}} \tag{10-30}$$

Corresponding liquid flow rates are obtained from (10-6).

The solution is considered converged when sets of $T_j^{(k)}$ and $V_j^{(k)}$ values are within some prescribed tolerance of corresponding sets of $T_j^{(k-1)}$ and $V_j^{(k-1)}$ values, where k is the iteration index. One convergence criterion is

$$\sum_{j=1}^{N} \left[\frac{T_j^{(k)} - T_j^{(k-1)}}{T_j^{(k)}}\right]^2 + \sum_{j=1}^{N} \left[\frac{V_j^{(k)} - V_j^{(k-1)}}{T_j^{(k)}}\right]^2 \le \epsilon \tag{10-31}$$

where T is an absolute temperature and ϵ is some prescribed tolerance. However, Wang and Henke suggest that the following simpler criterion, which is based on successive sets of T_j values only, is adequate.

$$\tau = \sum_{j=1}^{N} \left[T_j^{(k)} - T_j^{(k-1)}\right]^2 \le 0.01N \tag{10-32}$$

Successive substitution is often employed for iterating the tear variables; that is, values of T_j and V_j generated from (10-20) and (10-30) during an iteration are used directly to initiate the next iteration. It is desirable to inspect, and, if necessary, adjust the generated tear variables prior to beginning the next iteration. Upper and lower bounds should be placed on stage temperatures, and negative values of interstage flow rates should be changed to near-zero positive values. Also, to prevent iteration oscillations, damping can be employed to limit changes in V_j and absolute T_j from one iteration to the next to, say, 10%.

EXAMPLE 10.1 First Iteration of the BP Method.

For the distillation column shown in Figure 10.7, do one iteration of the BP method up to and including the calculation of a new set of T_j values from (10-20). Assume composition-independent K-values.

Solution

By overall total material balance

Liquid distillate $= U_1 = F_3 - L_5 = 100 - 50 = 50$ lbmol/h

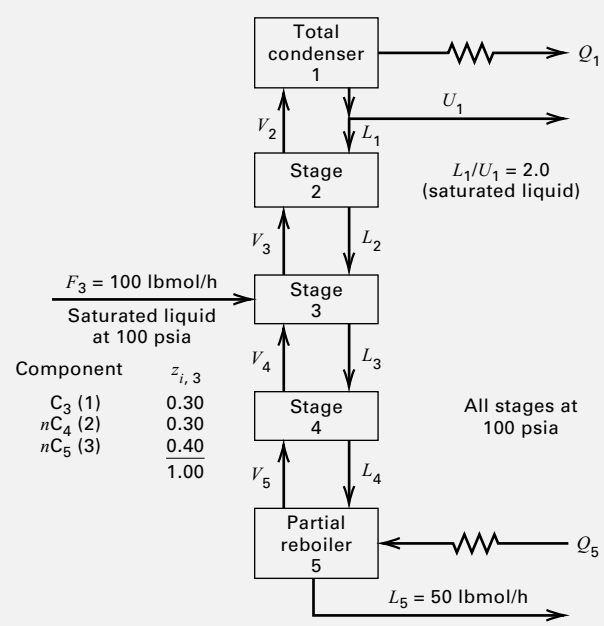

Figure 10.7 Specifications for distillation column of Example 10.1.